PRODUCT SHEET

Description:
Butt Hinge, 50x37x1,5mm, Steel, BPL, 4 CSK Holes

Item number:
15.13.083-0

Units	Box	Carton	HS Code	Barcode
Pcs.	20	800	8302100090	5704866057820

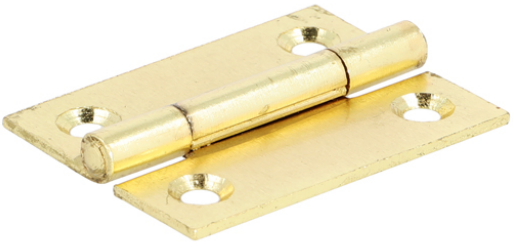

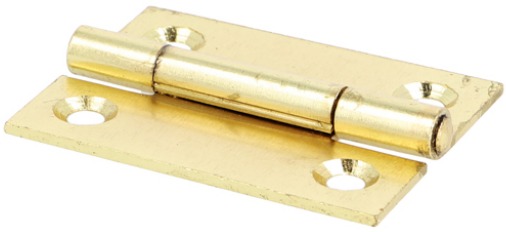

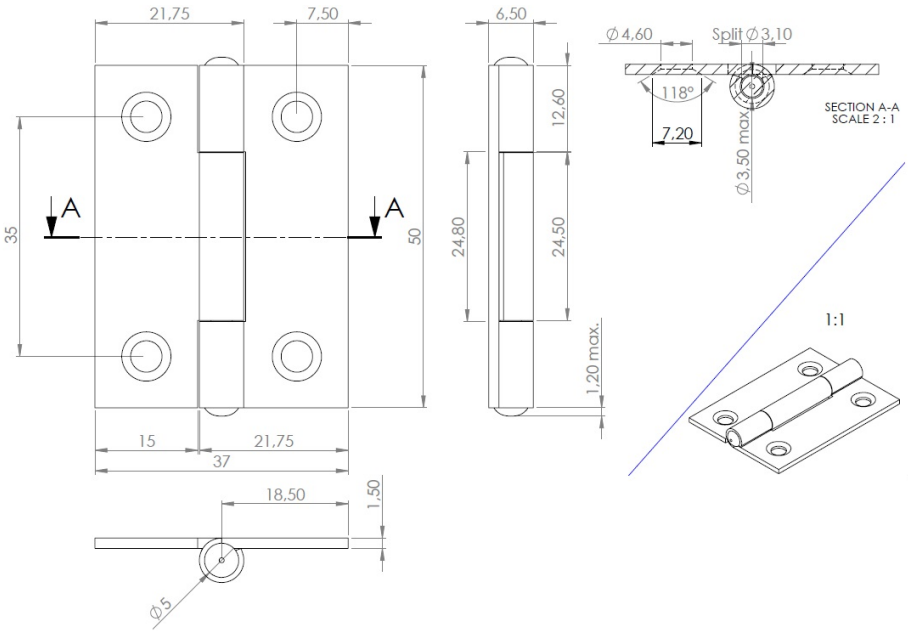

SISO A/S
Mileparken 11
DK-2740 Skovlunde
Denmark
VAT: DK 24786013

Phone +45 45 830 900

www.siso.dk
siso@siso.dk

Danske Bank
Nytorv Branch
Copenhagen
SWIFT: DABADKKK

Account no.
4180 3112 112936
IBAN Account
DK7230003112112936